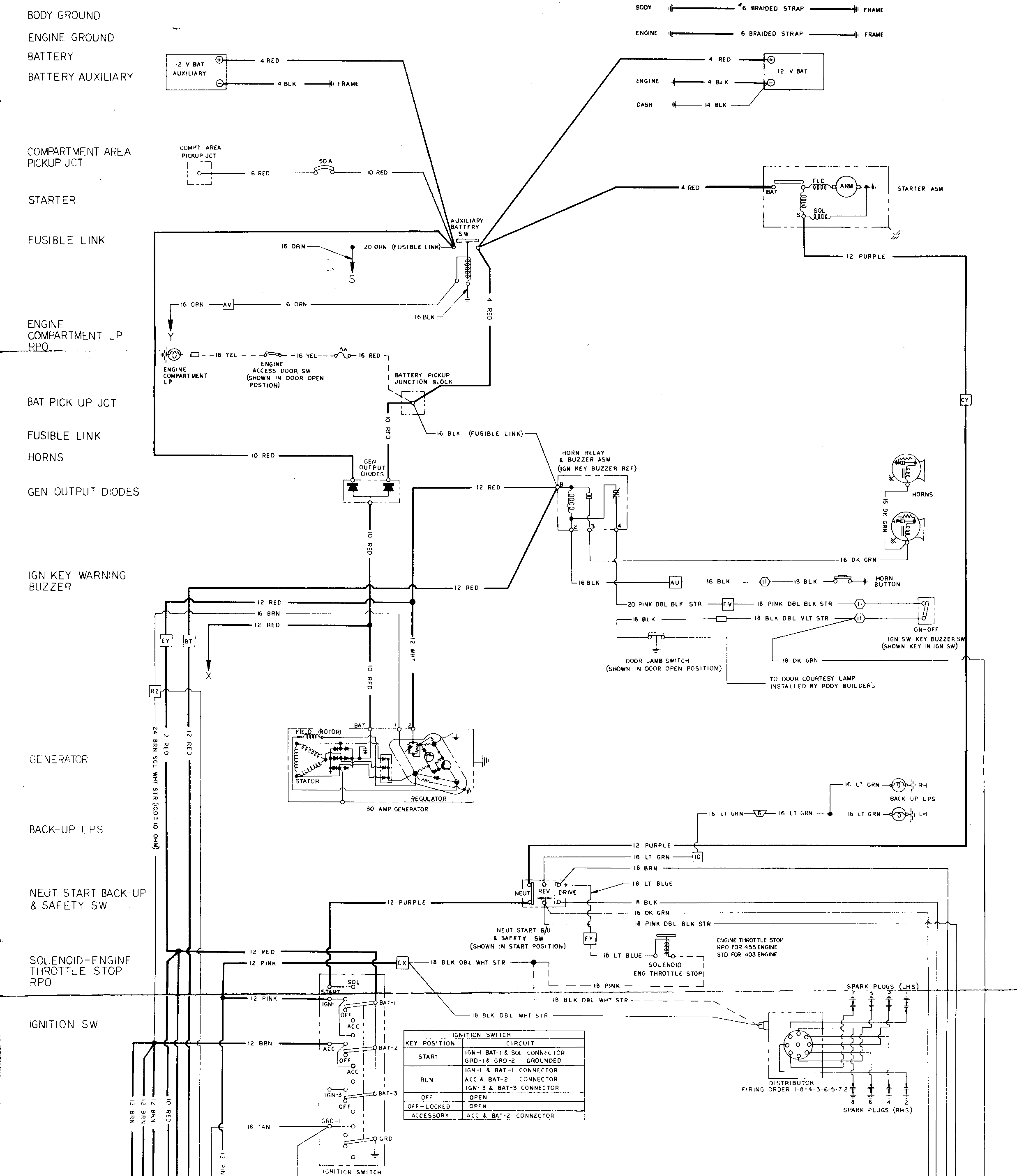
BODY GROUND
ENGINE GROUND
BATTERY
BATTERY AUXILIARY
COMPARTMENT AREA PICKUP JCT
STARTER
FUSIBLE LINK
ENGINE COMPARTMENT LP RPO
BAT PICK UP JCT
FUSIBLE LINK
HORNS
GEN OUTPUT DIODES
IGN KEY WARNING BUZZER
GENERATOR
BACK-UP LPS
NEUT START BACK-UP & SAFETY SW
SOLENOID-ENGINE THROTTLE STOP RPO
IGNITION SW
BODY
6 BRAIDED STRAP
FRAME
ENGINE
6 BRAIDED STRAP
FRAME
12 V BAT AUXILIARY
4 RED
4 BLK
FRAME
4 RED
12 V BAT
ENGINE
4 BLK
DASH
14 BLK
COMPT AREA PICKUP JCT
6 RED
50 A
10 RED
AUXILIARY BATTERY SW
4 RED
STARTER ASM
BAT
FLD
ARM
SOL
S
16 ORN
20 ORN (FUSIBLE LINK)
S
12 PURPLE
16 ORN
AV
16 ORN
16 BLK
4 RED
Y
16 YEL
16 YEL
5A
16 RED
ENGINE COMPARTMENT LP
ENGINE ACCESS DOOR SW (SHOWN IN DOOR OPEN POSTION)
BATTERY PICKUP JUNCTION BLOCK
10 RED
16 BLK (FUSIBLE LINK)
CY
10 RED
GEN OUTPUT DIODES
12 RED
HORN RELAY & BUZZER ASM (IGN KEY BUZZER REF)
B
2
3
4
HORNS
16 DK GRN
16 DK GRN
10 RED
12 RED
16 BLK
AU
16 BLK
11
18 BLK
HORN BUTTON
12 RED
16 BRN
12 RED
20 PINK DBL BLK STR
FV
18 PINK DBL BLK STR
11
18 BLK
18 BLK DBL VLT STR
11
ON-OFF
IGN SW-KEY BUZZER SW (SHOWN KEY IN IGN SW)
EY
BT
X
12 WHT
DOOR JAMB SWITCH (SHOWN IN DOOR OPEN POSITION)
18 DK GRN
TO DOOR COURTESY LAMP INSTALLED BY BODY BUILDER'S
BZ
10 RED
24 BRN SGL WHT STR (100 ± 10 OHM)
12 RED
12 RED
BAT
1
2
FIELD (ROTOR)
STATOR
REGULATOR
80 AMP GENERATOR
16 LT GRN
RH
BACK UP LPS
16 LT GRN
6Z
16 LT GRN
16 LT GRN
LH
12 PURPLE
16 LT GRN
10
18 BRN
18 LT BLUE
NEUT
REV
DRIVE
12 PURPLE
18 BLK
16 DK GRN
18 PINK DBL BLK STR
NEUT START B/U & SAFETY SW (SHOWN IN START POSITION)
FY
ENGINE THROTTLE STOP RPO FOR 455 ENGINE STD FOR 403 ENGINE
18 LT BLUE
SOLENOID ENG THROTTLE STOP
12 RED
12 PINK
CX
18 BLK DBL WHT STR
18 PINK
SOL
START
12 PINK
IGN-1
BAT-1
OFF
ACC
18 BLK DBL WHT STR
18 BLK DBL WHT STR
SPARK PLUGS (LHS)
7
5
3
1
12 BRN
ACC
BAT-2
OFF
ACC
DISTRIBUTOR FIRING ORDER 1-8-4-3-6-5-7-2
8
6
4
2
SPARK PLUGS (RHS)
IGN-3
BAT-3
OFF
12 BRN
12 BRN
12 BRN
10 RED
18 TAN
GRD-1
GRD
12 PIN
IGNITION SWITCH

IGNITION SWITCH	
KEY POSITION	CIRCUIT
START	IGN-1 BAT-1 & SOL CONNECTOR GRD-1 & GRD-2 GROUNDED
RUN	IGN-1 & BAT-1 CONNECTOR ACC & BAT-2 CONNECTOR IGN-3 & BAT-3 CONNECTOR
OFF	OPEN
OFF-LOCKED	OPEN
ACCESSORY	ACC & BAT-2 CONNECTOR

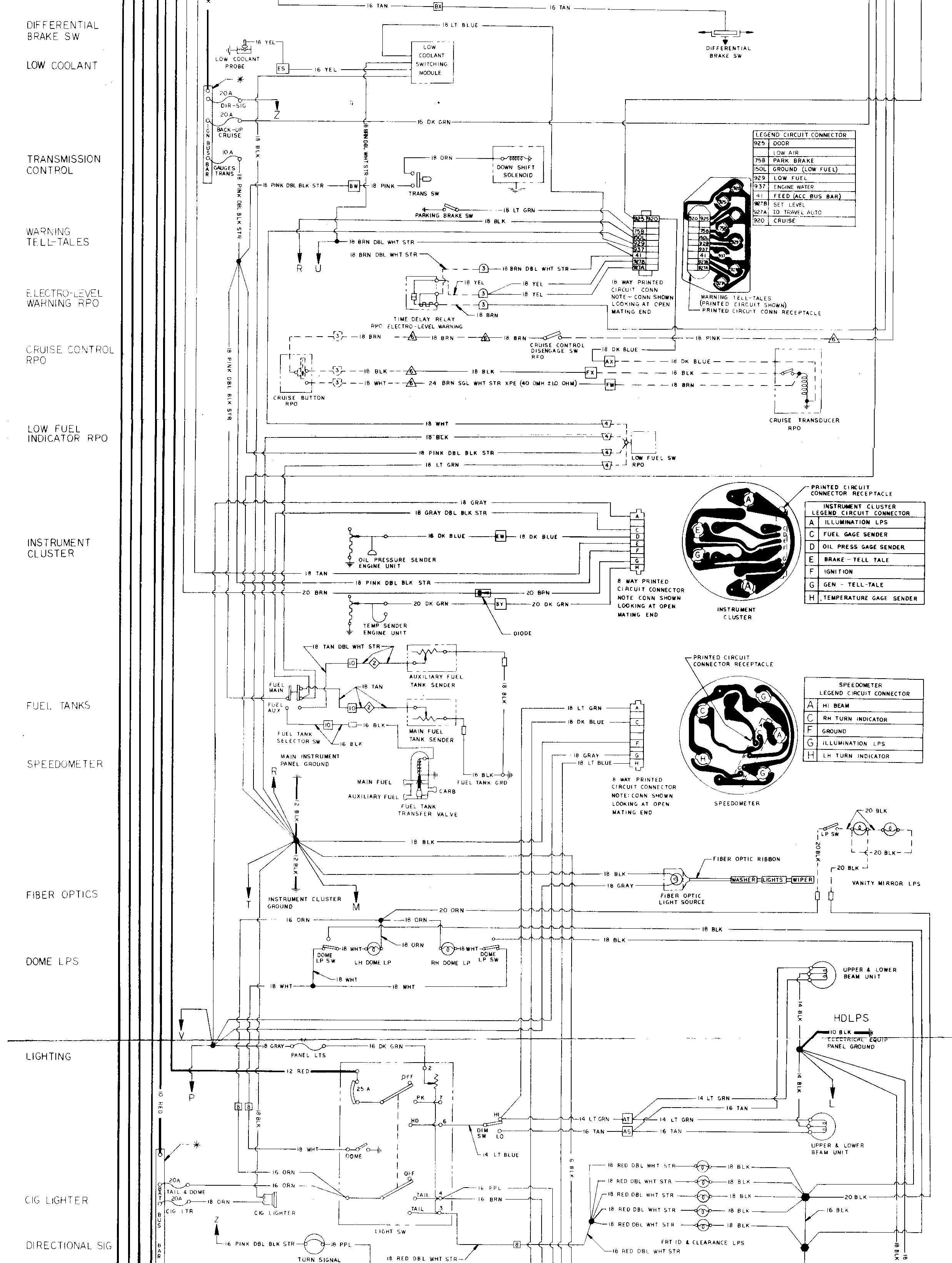
DIFFERENTIAL BRAKE SW
LOW COOLANT
TRANSMISSION CONTROL
WARNING TELL-TALES
ELECTRO-LEVEL WARNING RPO
CRUISE CONTROL RPO
LOW FUEL INDICATOR RPO
INSTRUMENT CLUSTER
FUEL TANKS
SPEEDOMETER
FIBER OPTICS
DOME LPS
LIGHTING
CIG LIGHTER
DIRECTIONAL SIG
16 TAN
BX
DIFFERENTIAL BRAKE SW
18 LT BLUE
16 YEL
LOW COOLANT PROBE
ES
LOW COOLANT SWITCHING MODULE
20A DIR-SIG
20A BACK-UP CRUISE
10A GAUGES TRANS
IGN BUS BAR
Z
16 DK GRN
18 BLK
18 BRN DBL WHT STR
18 ORN
DOWN SHIFT SOLENOID
18 PINK DBL BLK STR
BW
18 PINK
TRANS SW
PARKING BRAKE SW
18 LT GRN
R
U
3
18 YEL
18 BRN
TIME DELAY RELAY RPO ELECTRO-LEVEL WARNING
18 WAY PRINTED CIRCUIT CONN NOTE - CONN SHOWN LOOKING AT OPEN MATING END
WARNING TELL-TALES (PRINTED CIRCUIT SHOWN)
PRINTED CIRCUIT CONN RECEPTACLE
925 920 758 150L 929 937 41 927B 927A
CRUISE CONTROL DISENGAGE SW RPO
18 PINK
6
18 DK BLUE
AX
FX
FW
18 WHT
24 BRN SGL WHT STR XPE (40 OMH ±1.0 OHM)
CRUISE BUTTON RPO
CRUISE TRANSDUCER RPO
4
LOW FUEL SW RPO
18 GRAY
18 GRAY DBL BLK STR
16 DK BLUE
EW
OIL PRESSURE SENDER ENGINE UNIT
18 TAN
20 BRN
20 DK GRN
BY
TEMP SENDER ENGINE UNIT
DIODE
8 WAY PRINTED CIRCUIT CONNECTOR NOTE CONN SHOWN LOOKING AT OPEN MATING END
PRINTED CIRCUIT CONNECTOR RECEPTACLE
INSTRUMENT CLUSTER
A C D E F G H
18 TAN DBL WHT STR
10
2
AUXILIARY FUEL TANK SENDER
FUEL MAIN
FUEL AUX
FUEL TANK SELECTOR SW
16 BLK
MAIN FUEL TANK SENDER
MAIN INSTRUMENT PANEL GROUND
MAIN FUEL
AUXILIARY FUEL
CARB
FUEL TANK TRANSFER VALVE
FUEL TANK GRD
18 LT BLUE
8 WAY PRINTED CIRCUIT CONNECTOR NOTE: CONN SHOWN LOOKING AT OPEN MATING END
SPEEDOMETER
12 BLK
T
M
INSTRUMENT CLUSTER GROUND
FIBER OPTIC RIBBON
FIBER OPTIC LIGHT SOURCE
WASHER
LIGHTS
WIPER
LP SW
20 BLK
VANITY MIRROR LPS
20 ORN
16 ORN
18 ORN
DOME LP SW
LH DOME LP
RH DOME LP
18 WHT
UPPER & LOWER BEAM UNIT
14 BLK
HDLPS
10 BLK
ELECTRICAL EQUIP PANEL GROUND
L
V
PANEL LTS
12 RED
P
25 A
OFF
PK
HD
DIM SW
HI
LO
14 LT GRN
16 TAN
AT
AS
14 LT BLUE
10 RED
DOME
8
6 BLK
18 RED DBL WHT STR
FRT ID & CLEARANCE LPS
20A TAIL & DOME
20A CIG LTR
BATT BUS BAR
CIG LIGHTER
16 PPL
16 BRN
TAIL
LIGHT SW
16 PINK DBL BLK STR
18 PPL
TURN SIGNAL

LEGEND	CIRCUIT CONNECTOR
925	DOOR
	LOW AIR
758	PARK BRAKE
150L	GROUND (LOW FUEL)
929	LOW FUEL
937	ENGINE WATER
41	FEED (ACC BUS BAR)
927B 927A	SET LEVEL TO TRAVEL AUTO
920	CRUISE

INSTRUMENT CLUSTER

LEGEND	CIRCUIT CONNECTOR
A	ILLUMINATION LPS
C	FUEL GAGE SENDER
D	OIL PRESS GAGE SENDER
E	BRAKE - TELL TALE
F	IGNITION
G	GEN - TELL-TALE
H	TEMPERATURE GAGE SENDER

SPEEDOMETER

LEGEND	CIRCUIT CONNECTOR
A	HI BEAM
C	RH TURN INDICATOR
F	GROUND
G	ILLUMINATION LPS
H	LH TURN INDICATOR

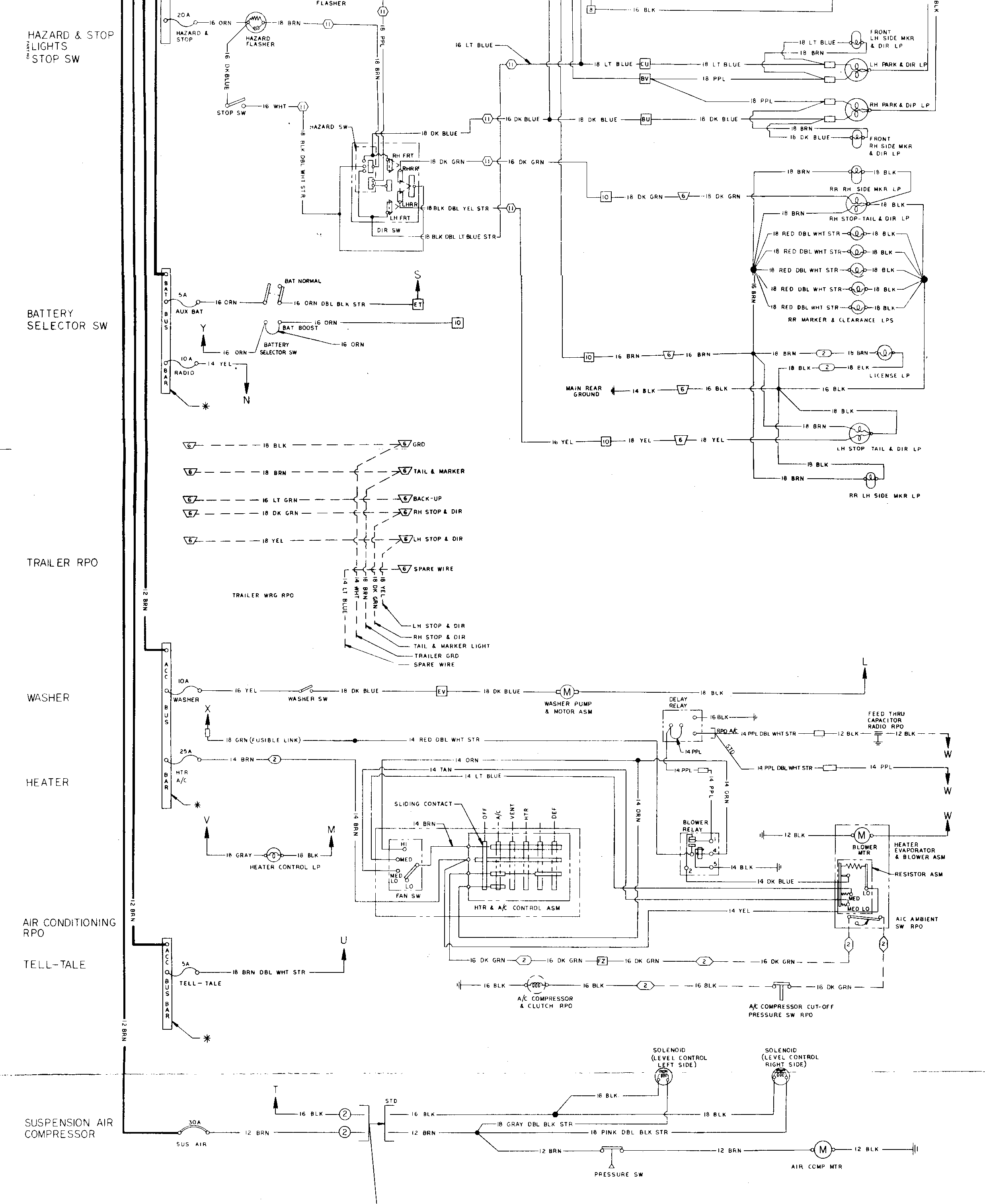
HAZARD & STOP LIGHTS & STOP SW
BATTERY SELECTOR SW
TRAILER RPO
WASHER
HEATER
AIR CONDITIONING RPO
TELL-TALE
SUSPENSION AIR COMPRESSOR
FLASHER
20A
HAZARD & STOP
HAZARD FLASHER
16 ORN
18 BRN
18 PPL
16 DK BLUE
16 WHT
STOP SW
HAZARD SW
18 BLK DBL WHT STR
18 DK BLUE
18 DK GRN
RH FRT
RH RR
LH RR
LH FRT
DIR SW
18 BLK DBL YEL STR
18 BLK DBL LT BLUE STR
16 LT BLUE
16 DK BLUE
16 DK GRN
16 BLK
18 LT BLUE
CU
BV
BU
FRONT LH SIDE MKR & DIR LP
LH PARK & DIR LP
RH PARK & DIR LP
FRONT RH SIDE MKR & DIR LP
18 BLK
RR RH SIDE MKR LP
RH STOP-TAIL & DIR LP
18 RED DBL WHT STR
RR MARKER & CLEARANCE LPS
16 BRN
LICENSE LP
MAIN REAR GROUND
14 BLK
16 YEL
18 YEL
LH STOP TAIL & DIR LP
RR LH SIDE MKR LP
BAT BUS BAR
5A
AUX BAT
BAT NORMAL
16 ORN DBL BLK STR
S
ET
BAT BOOST
Y
BATTERY SELECTOR SW
10A
RADIO
14 YEL
N
GRD
TAIL & MARKER
16 LT GRN
BACK-UP
RH STOP & DIR
LH STOP & DIR
SPARE WIRE
14 LT BLUE
14 WHT
18 BRN
18 DK GRN
18 YEL
TRAILER WRG RPO
TAIL & MARKER LIGHT
TRAILER GRD
12 BRN
ACC BUS BAR
WASHER
WASHER SW
EV
WASHER PUMP & MOTOR ASM
L
X
18 GRN (FUSIBLE LINK)
14 RED DBL WHT STR
DELAY RELAY
RPO A/C
14 PPL DBL WHT STR
12 BLK
FEED THRU CAPACITOR RADIO RPO
STD
14 PPL
W
25A
HTR A/C
14 BRN
14 ORN
14 TAN
14 LT BLUE
SLIDING CONTACT
OFF
A/C
VENT
HTR
DEF
HI
MED
MED LO
LO
FAN SW
HTR & A/C CONTROL ASM
BLOWER RELAY
14 DK BLUE
14 YEL
BLOWER MTR
HEATER EVAPORATOR & BLOWER ASM
RESISTOR ASM
A/C AMBIENT SW RPO
V
M
18 GRAY
HEATER CONTROL LP
16 DK GRN
FZ
A/C COMPRESSOR & CLUTCH RPO
A/C COMPRESSOR CUT-OFF PRESSURE SW RPO
U
18 BRN DBL WHT STR
TELL-TALE
SOLENOID (LEVEL CONTROL LEFT SIDE)
SOLENOID (LEVEL CONTROL RIGHT SIDE)
T
30A
SUS AIR
18 GRAY DBL BLK STR
18 PINK DBL BLK STR
PRESSURE SW
AIR COMP MTR

MD-15375

ELECTRO-LEVEL
RPO

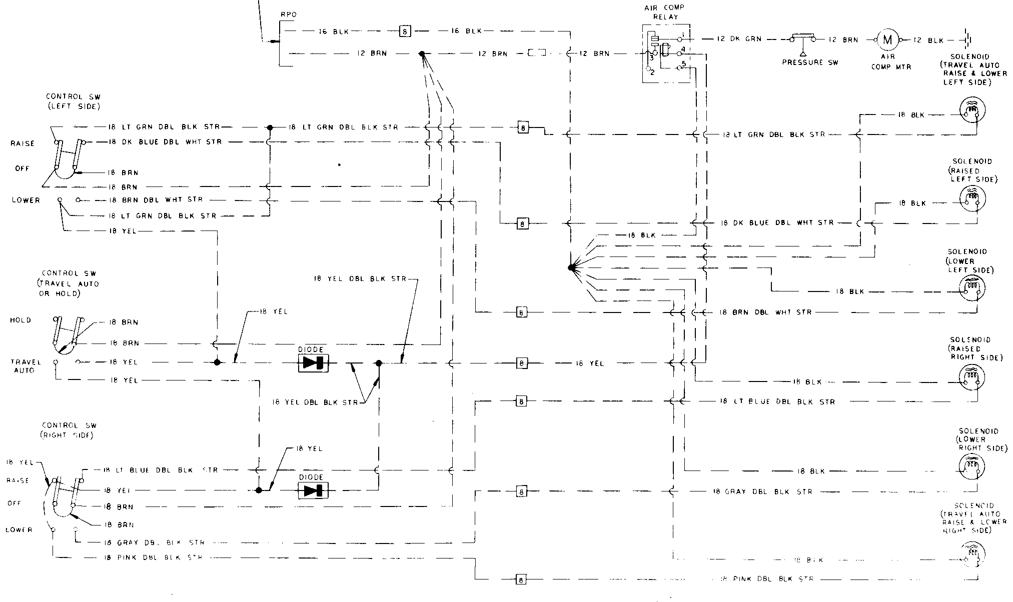
RPO
16 BLK
12 BRN
AIR COMP RELAY
12 DK GRN
PRESSURE SW
12 BRN
AIR COMP MTR
12 BLK
SOLENOID (TRAVEL AUTO RAISE & LOWER LEFT SIDE)
CONTROL SW (LEFT SIDE)
RAISE
OFF
LOWER
18 LT GRN DBL BLK STR
18 DK BLUE DBL WHT STR
18 BRN
18 BRN DBL WHT STR
18 YEL
SOLENOID (RAISED LEFT SIDE)
SOLENOID (LOWER LEFT SIDE)
CONTROL SW (TRAVEL AUTO OR HOLD)
HOLD
TRAVEL AUTO
18 YEL DBL BLK STR
DIODE
SOLENOID (RAISED RIGHT SIDE)
18 LT BLUE DBL BLK STR
CONTROL SW (RIGHT SIDE)
SOLENOID (LOWER RIGHT SIDE)
18 GRAY DBL BLK STR
SOLENOID (TRAVEL AUTO RAISE & LOWER RIGHT SIDE)
18 PINK DBL BLK STR
18 BLK

RADIO - RPO
NOTE: SEE HEATER CIRCUIT FOR CAPACITOR

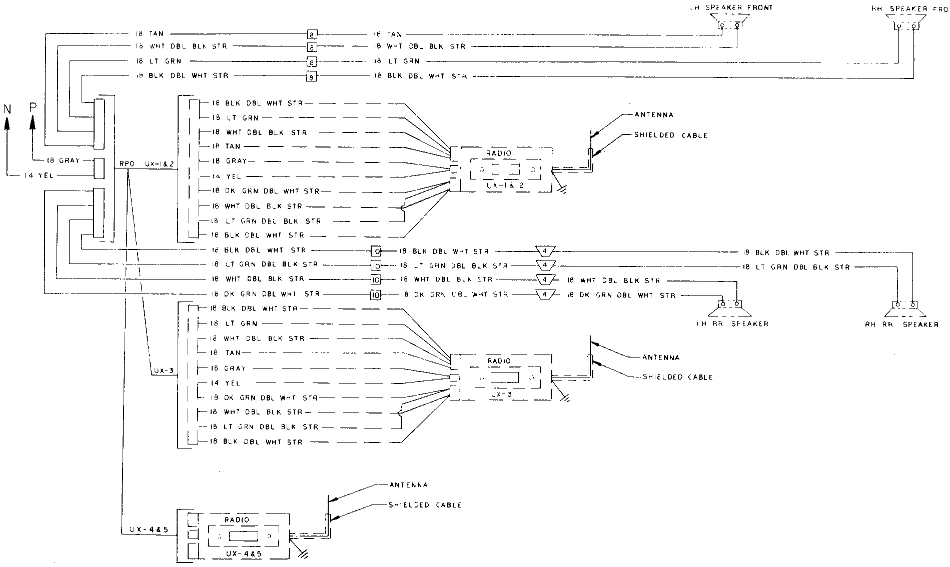
N
P
18 GRAY
14 YEL
RPO UX-1&2
UX-3
UX-4&5
LH SPEAKER FRONT
RH SPEAKER FRONT
18 TAN
18 WHT DBL BLK STR
18 LT GRN
18 BLK DBL WHT STR
18 DK GRN DBL WHT STR
18 LT GRN DBL BLK STR
ANTENNA
SHIELDED CABLE
RADIO
UX-1 & 2
UX-3
UX-4&5
LH RR SPEAKER
RH RR SPEAKER

LEGEND

⬆
CIRCUIT
IDENTIFICATION

SYMBOL	JUNCTION	FUNCTION	LOCATION
AS THRU EZ	LETTERED TERM. WIRE CAVITY @ WIRE END OF 40 WAY CONN. (PART OF INSTR. PANEL HARN. ASM)	INSTR. PANEL HARN. TO ENGINE HARN. & FWD LP WIRING HARN	ENGINE COMPARTMENT DASH PANEL UPPER RH SIDE
3	3 WAY MULTIPLE CONNECTOR	INSTR PANEL HARN TO POWER LEVELER WARNING	UPPER INSTR PANEL AT GAGE CLUSTER
2	2 WAY MULTIPLE CONNECTOR	REAR BODY HARN TO LICENSE LP	REAR LICENSE PLATE AREA
11	11 WAY MULTIPLE CONNECTOR	INSTR PANEL HARN TO DIR SW HARN	UNDER INSTR PANEL ON STEERING COLUMN
2	2 WAY MULTIPLE CONNECTOR	SIDE BODY HARN TO FUEL TANK SENDER	LH FRAME RAIL FRONT OF MAIN FUEL TANK
3	3 WAY MULTIPLE CONNECTOR	REAR SPEAKERS	REAR OF VEHICLE BOTH CORNERS
4	4 WAY MULTIPLE CONNECTOR	INSTR PANEL HARN TO LOW FUEL INDICATOR	UNDER INSTR PANEL AT TELL TALE
6	6 WAY MULTIPLE CONNECTOR	SIDE BODY HARN TO REAR BODY HARN	LEFT REAR CARLING
2	2 WAY MULTIPLE CONNECTOR	HEATER & AIR CONDITIONING FEED	UNDER INSTR PANEL AT HEATER CONTROLS
10	10 WAY MULTIPLE CONNECTOR	INSTR PANEL HARN TO SIDE BODY HARN	UNDER INSTR PANEL UPPER LH SIDE OF DASH PANEL
○	TERMINAL OR CONNECTOR TERMINATION	RELATED CIRCUITS	
●	SPLICE		
⬢	SPLICE	FRONT ROOF HARN GROUND CIRCUIT	FRONT ROOF NEAR DOME LIGHTS & SPEAKERS
∽	FUSE	FUSE BLOCK – PART OF INSTR PANEL HARN	BEHIND GLOVE BOX COMPARTMENT
30A	CIRCUIT BREAKER		
— — —	BROKEN LINES & SPECIFIED RPO DENOTES WRG & PARTS OTHER THAN STD & NOT IN STD WRG HARN ASM'S		
✳	BUS BAR PART OF FUSE BLOCK	FUSE BLOCK PART OF INSTR PANEL HARN	
6	6 WAY MULTIPLE CONNECTOR	CRUISE CONTROL	UNDER INSTR PANEL AT STEERING COLUMN
3	3 WAY MULTIPLE CONNECTOR	CRUISE CONTROL	UNDER INSTR PANEL AT STEERING COLUMN
◘	JUNCTION BLOCK (FUSIBLE LINK)	RELATED CIRCUITS	ENGINE COMPARTMENT – DASH PANEL UPPER RH SIDE
▭	SINGLE LINE CONNECTOR	RELATED CIRCUITS	
8	8 WAY MULTIPLE CONNECTOR	INSTR PANEL HARN TO FRONT ROOF HARN	UNDER INSTR PANEL UPPER LH SIDE
60A	LINE CIRCUIT BREAKER	CIRCUIT PROTECTOR FOR LIVING AREA BATTERY	MOTOR GENERATOR COMPARTMENT
2	2 WAY MULTIPLE CONNECTOR	AMBIENT SWITCH FOR AIR CONDITIONING	PART OF HEATER/AIR CONDITIONING UNIT
②	2 WAY MULTIPLE CONNECTORS	INSTR PANEL HARN TO LEVEL CONTROL HARN	UNDER INSTR PANEL AT STEERING COLUMN