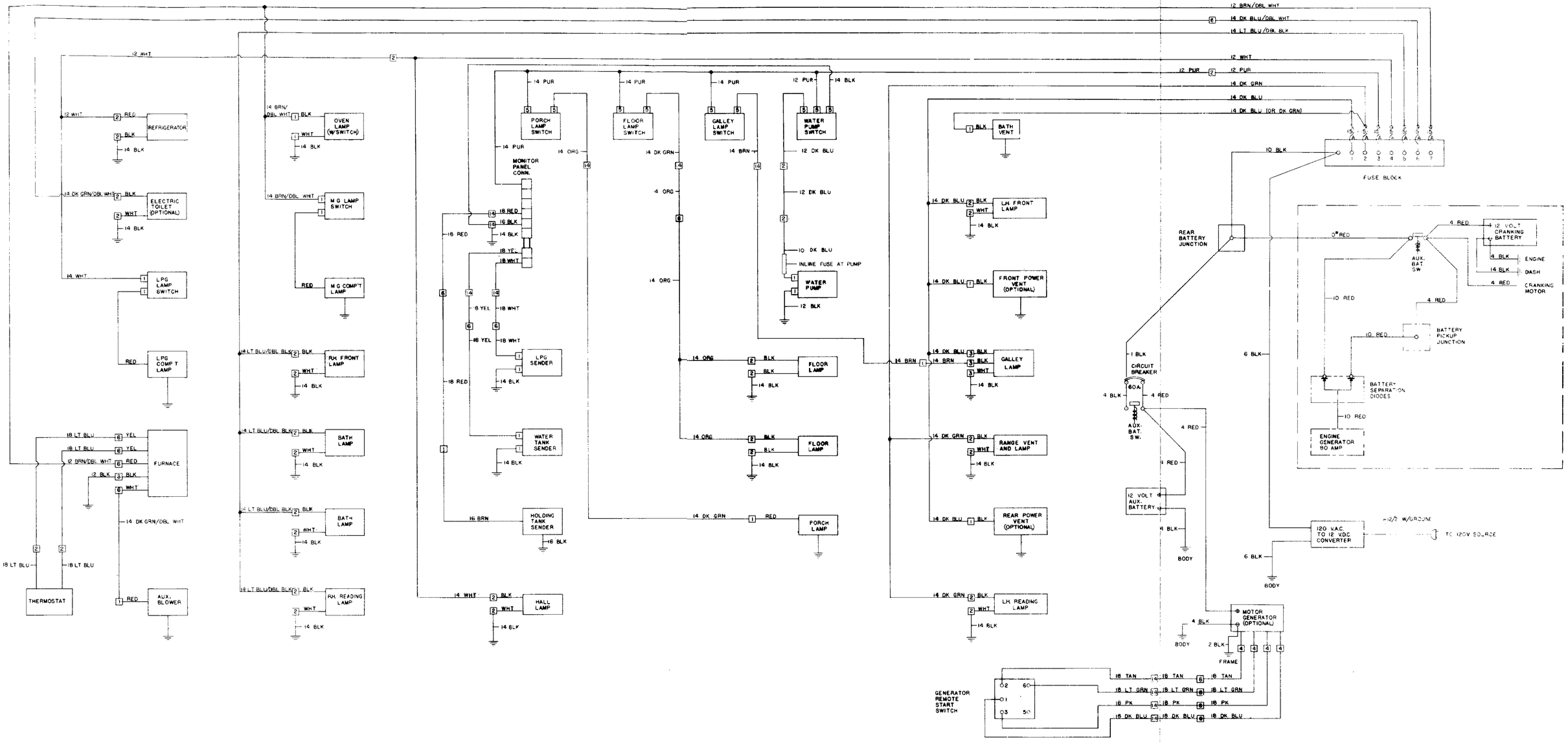

1976 GMC MOTORHOME LIVING AREA 12-VOLT DC ELECTRICAL SYSTEM (MODEL ZEO6581)

DECEMBER 1976